The factory lamp s

by Ramón Esteve

The Factory Collection, designed by Ramon Esteve for Vondom, is **characterized by the aluminum profile and the “deployé” mesh**. Discover this collection of aluminium furniture composed of a modular sofa, an armchair, a lounger, a side table, a lamp, a coffee table, a high table, chairs, and a room divider.

Info

Description

Designer lamp. The deployed mesh is made from aluminum, and the inner lighting is made out of polyethylene resin manufactured by rotational molding. Suitable for an interior and an outdoor use. Available in various finishes.

Weight: 3.99 Kg

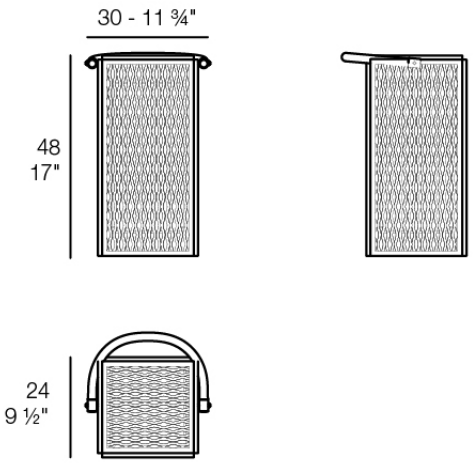

THE FACTORY Lámpara 30 x 24 x 48
THE FACTORY Puff S 11¾ x 9½ x 19"

VONDOM

Finishes

lighting

RGBW LED BATTERY
Ref. 54612Y

white	british gray	traffic gray	black	ecru
crema	castoro fiber	cacao	notte blue	modo green
pickle	almond	red	purjai red	melon

Unit with internal lighting with battery-powered RGBW LED technology. Includes charger and remote control for switching colors and charger. Available only in matte ice white finish.

RGBW LED DMX BATTERY
Ref. 54612DY

VONDOM

white	british gray	traffic gray	black	ecru
crema	castoro fiber	cacao	notte blue	modo green
pickle	almond	red	purjai red	melon
mostaza				

Unit with internal lighting with RGBW LED technology and remote control unit for switching colors. Also controlLED by DMX-1024 (wireless), enabling communication between one or more products simultaneously via the DMX transmitter (not included). There are two options to choose from: Professional XLR DMX and Home WIFI DMX. (Remote control included).

VONDOM

Ambients