Faz side bar

by Ramón Esteve

Faz is a modular collection of outdoor furniture and planters designed by Ramón Esteve for Vondom. He is the architect of harmony, serenity, timelessness and universality, and he has created mineral and emphatic shapes that make Faz a design that contextualizes with homes and installations. An ambience, encircling as a result of the blissful combination of the material and lighting, so that the sole sensation would be its fusion.

Info

Description

Made of polyethylene resin by rotational moulding. 100% Recyclable. Item suitable for indoor and outdoor use. Available in different finishes.

Weight: 45.05 Kg

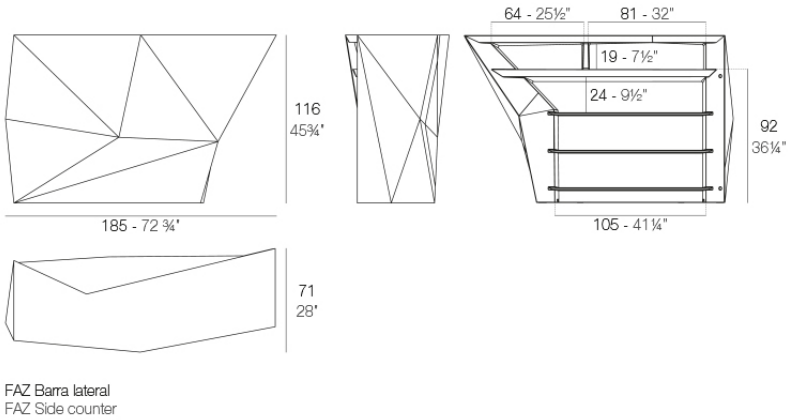

Combinations

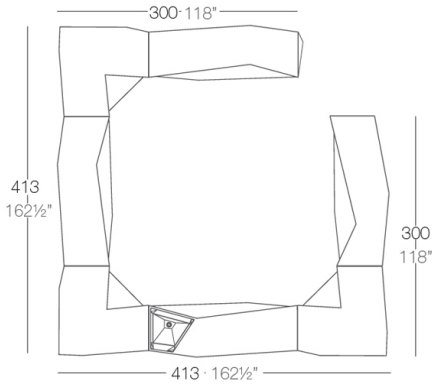

2 X 54113
1 X 54114
3 X 54112
1 X 54111

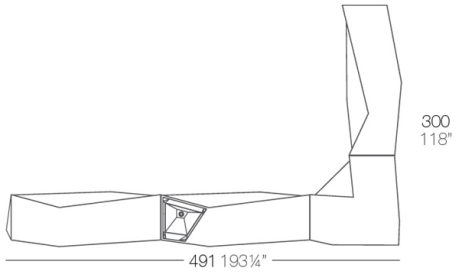

1 X 54113
1 X 54114
1 X 54112
1 X 54111

Accessories

- **BLUETOOTH**
- **SHELVES**
- **WHEELS**
  Includes castors for easy move

VONDOM

Finishes

finishes

BASIC
Ref. 54111

purjai red | white | black | bronze | steel

anthracite | red | khaki | taupe | ecru

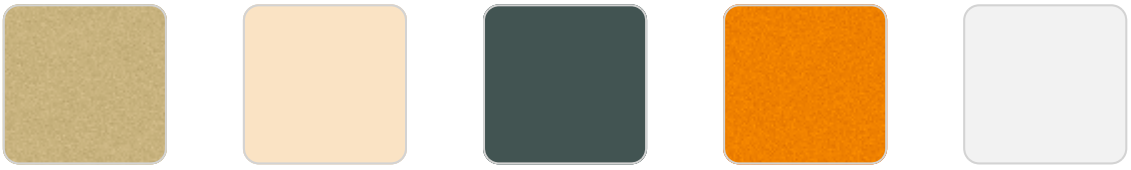

beige | crema | green | orange | ice

notte blue

Matt Polyethylene

LACQUERED
Ref. 54111F

VONDOM

modo green
purjai red
white
black
bronze
steel
anthracite
champany
red
khaki
taupe
ecru
beige

Lacquered Polyethylene

lighting

WHITE LED
Ref. 54111W

ice

White internally lit unit with LED technology. Available only in matte ice white finish.

RGBW LED
Ref. 54111L

ice

Unit with internal lighting with RGBW LED technology and remote control unit for switching colors. Available only in matte ice white finish. Remote control included.

RGBW LED DMX
Ref. 54111D

ice

Unit with internal lighting with RGBW LED technology and remote control unit for switching colors. Also controlLED by DMX-1024 (wireless), enabling communication between one or more products simultaneously via the DMX transmitter (not included). There are two options to choose from: Professional XLR DMX and Home WIFI DMX. (Remote control included). Optional battery

RGBW LED BATTERY
Ref. 54111Y

ice

Unit with internal lighting with battery-powered RGBW LED technology. Includes charger and remote control for switching colors and charger. Available only in matte ice white finish.

RGBW LED DMX BATTERY
Ref. 54111DY

ice

Unit with internal lighting with RGBW LED technology and remote control unit for switching colors. Also controlLED by DMX-1024 (wireless), enabling communication between one or more products simultaneously via the DMX transmitter (not included). There are two options to choose from: Professional XLR DMX and Home WIFI DMX. (Remote control included).

VONDOM

Ambients