Faz bench

by Ramón Esteve

Faz is a modular collection of outdoor furniture and planters designed by Ramón Esteve for Vondom. He is the architect of harmony, serenity, timelessness and universality, and he has created mineral and emphatic shapes that make Faz a design that contextualizes with homes and installations. An ambience, encircling as a result of the blissful combination of the material and lighting, so that the sole sensation would be its fusion.

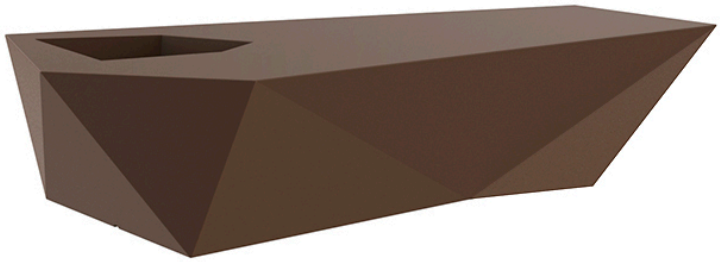

VONDOM

Info

Description

Made of polyethylene resin by rotational moulding. 100% Recyclable. Item suitable for indoor and outdoor use. Available in different finishes.

Weight: 37 Kg

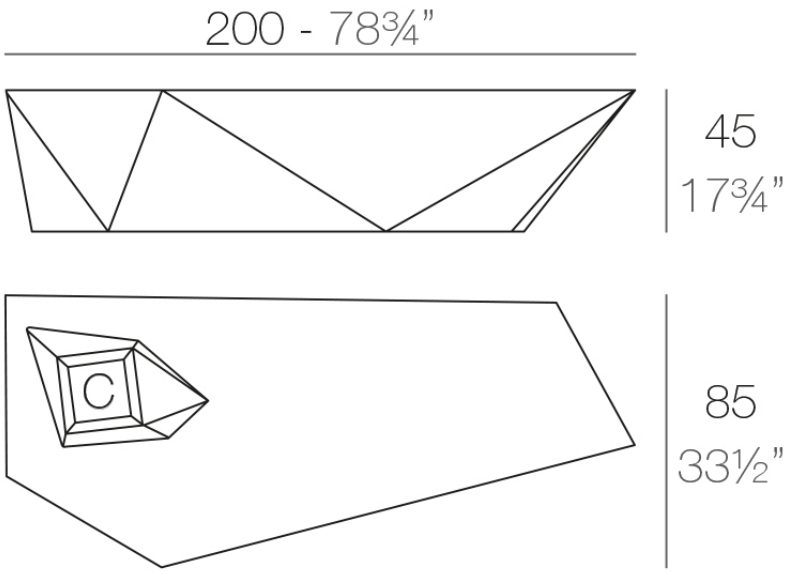

FAZ Banco C = 28 x 28 x 33 cm
FAZ Bench C = 11" x 11" x 13"

Accessories

- **JOINING HARDWARE KIT**
  Joining hardware kit

- Fabric

VONDOM

Finishes

finishes

BASIC
Ref. 54046

Matt Polyethylene

SELF-WATERING
Ref. 54046R

VONDOM

green
purjai red
orange
ice
notte blue
crema
white
black
bronze
steel
anthracite
red
khaki
taupe
ecru
beige

Self-watering system included in all planters except those with basic finish

LACQUERED
Ref. 54046F

purjai red
white
black
bronze
steel
anthracite
red
khaki
taupe
ecru

beige

modo green

champany

Lacquered Polyethylene

lighting

WHITE LED
Ref. 54046W

ice

White internally lit unit with LED technology. Available only in matte ice white finish.

RGBW LED
Ref. 54046L

ice

Unit with internal lighting with RGBW LED technology and remote control unit for switching colors. Available only in matte ice white finish. Remote control included.

RGBW LED DMX
Ref. 54046D

ice

Unit with internal lighting with RGBW LED technology and remote control unit for switching colors. Also controlLED by DMX-1024 (wireless), enabling communication between one or more products simultaneously via the DMX transmitter (not included). There are two options to choose from: Professional XLR DMX and Home WIFI DMX. (Remote control included). Optional battery

RGBW LED BATTERY
Ref. 54046Y

ice

Unit with internal lighting with battery-powered RGBW LED technology. Includes charger and remote control for switching colors and charger. Available only in matte ice white finish.

RGBW LED DMX BATTERY
Ref. 54046DY

ice

Unit with internal lighting with RGBW LED technology and remote control unit for switching colors. Also controlLED by DMX-1024 (wireless), enabling communication between one or more products simultaneously via the DMX transmitter (not included). There are two options to choose from: Professional XLR

DMX and Home WIFI DMX. (Remote control included).

VONDOM

Ambients