Faz armchair

by Ramón Esteve

Faz is a modular collection of outdoor furniture and planters designed by Ramón Esteve for Vondom. He is the architect of harmony, serenity, timelessness and universality, and he has created mineral and emphatic shapes that make Faz a design that contextualizes with homes and installations. An ambience, encircling as a result of the blissful combination of the material and lighting, so that the sole sensation would be its fusion.

VONDOM

Info

Description

Made of polyethylene resin by rotational moulding. 100% Recyclable. Item suitable for indoor and outdoor use. Available in different finishes.

Weight: 12.02 Kg

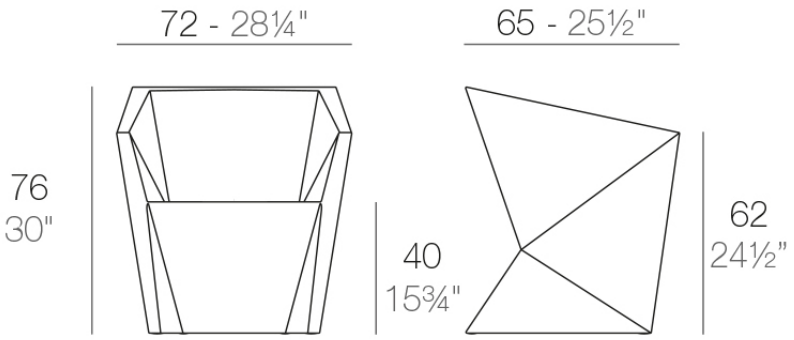

FAZ Silla con Brazos
FAZ Armchair

Accessories

- Fabric

Finishes

finishes

BASIC
Ref. 54015

purjai red | white | black | bronze | steel

anthracite | red | khaki | taupe | ecru

beige | orange | ice | notte blue | crema

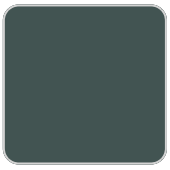

green

Matt Polyethylene

LACQUERED
Ref. 54015F

Lacquered Polyethylene

lighting

WHITE LED
Ref. 54015W

White internally lit unit with LED technology. Available only in matte ice white finish.

RGBW LED
Ref. 54015L

ice

Unit with internal lighting with RGBW LED technology and remote control unit for switching colors. Available only in matte ice white finish. Remote control included.

RGBW LED DMX
Ref. 54015D

ice

Unit with internal lighting with RGBW LED technology and remote control unit for switching colors. Also controlLED by DMX-1024 (wireless), enabling communication between one or more products simultaneously via the DMX transmitter (not included). There are two options to choose from: Professional XLR DMX and Home WIFI DMX. (Remote control included). Optional battery

RGBW LED BATTERY
Ref. 54015Y

ice

Unit with internal lighting with battery-powered RGBW LED technology. Includes charger and remote control for switching colors and charger. Available only in matte ice white finish.

RGBW LED DMX BATTERY
Ref. 54015DY

ice

Unit with internal lighting with RGBW LED technology and remote control unit for switching colors. Also controlLED by DMX-1024 (wireless), enabling communication between one or more products simultaneously via the DMX transmitter (not included). There are two options to choose from: Professional XLR DMX and Home WIFI DMX. (Remote control included).

VONDOM

Ambients