Faz ottoman-chaise longue

by Ramón Esteve

Faz is a modular collection of outdoor furniture and planters designed by Ramón Esteve for Vondom. He is the architect of harmony, serenity, timelessness and universality, and he has created mineral and emphatic shapes that make Faz a design that contextualizes with homes and installations. An ambience, encircling as a result of the blissful combination of the material and lighting, so that the sole sensation would be its fusion.

VONDOM

Info

Description

Made of polyethylene resin by rotational moulding. 100% Recyclable. Item suitable for indoor and outdoor use. Available in different finishes.

Weight: 15.68 Kg

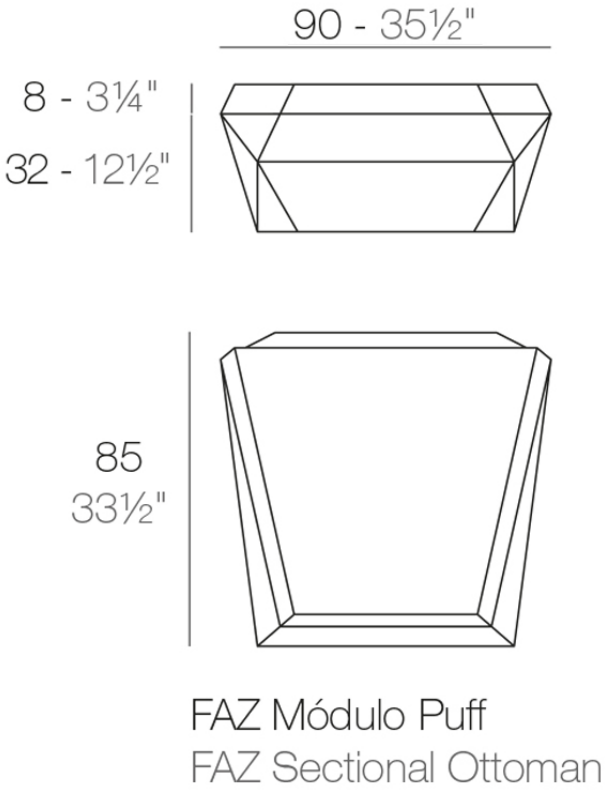

Combinations

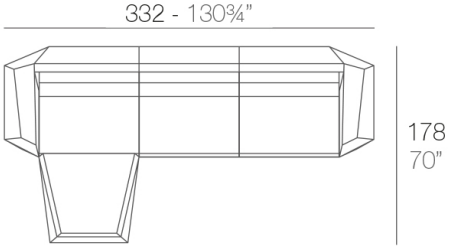

1 x 54004 Sofá Módulo Central - Sectional Sofa Armless
1 x 54002 Sofá Módulo Izquierdo - Sectional Sofa Left
1 x 54003 Sofá Módulo Derecho - Sectional Sofa Right
1 x 54006 Módulo Puff- Sectional Ottoman

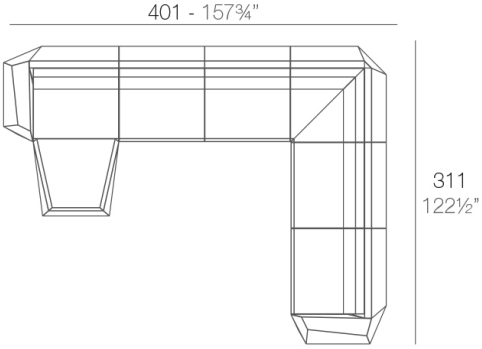

3 x 54004 Sofá Módulo Central - Sectional Sofa Armless
1 x 54002 Sofá Módulo Izquierdo - Sectional Sofa Left
1 x 54003 Sofá Módulo Derecho - Sectional Sofa Right
1 x 54005 Sofá Módulo Esquina 90º - Sectional Sofa Corner 90º
1 x 54006 Módulo Puff - Ottoman

VONDOM

Finishes

finishes

BASIC
Ref. 54006

orange | ice | notte blue | crema | green

purjai red | white | black | bronze | steel

anthracite | red | khaki | taupe | ecru

beige

Matt Polyethylene

LACQUERED
Ref. 54006F

VONDOM

purjai red | white | black | bronze | steel

anthracite | red | khaki | taupe | ecru

beige | modo green | champany

Lacquered Polyethylene

lighting

WHITE LED
Ref. 54006W

ice

White internally lit unit with LED technology. Available only in matte ice white finish.

RGBW LED
Ref. 54006L

ice

Unit with internal lighting with RGBW LED technology and remote control unit for switching colors. Available only in matte ice white finish. Remote control included.

RGBW LED DMX
Ref. 54006D

ice

Unit with internal lighting with RGBW LED technology and remote control unit for switching colors. Also controlLED by DMX-1024 (wireless), enabling communication between one or more products simultaneously via the DMX transmitter (not included). There are two options to choose from: Professional XLR DMX and Home WIFI DMX. (Remote control included). Optional battery

RGBW LED BATTERY
Ref. 54006Y

ice

Unit with internal lighting with battery-powered RGBW LED technology. Includes charger and remote control for switching colors and charger. Available only in matte ice white finish.

RGBW LED DMX BATTERY
Ref. 54006DY

ice

Unit with internal lighting with RGBW LED technology and remote control unit for switching colors. Also controlLED by DMX-1024 (wireless), enabling communication between one or more products simultaneously via the DMX transmitter (not included). There are two options to choose from: Professional XLR DMX and Home WIFI DMX. (Remote control included).

fabric

GLAD
Ref. 54006CO

oro 1031

ocre 1051

sunset 1020

delhi 1038

lima 1030

aguacate 1028

caribe 1004

bosc 1029

artemisa 1027

oasis 1007

oceano 1005

pruna 1045

noa 1026

berry 1021

amatista 1011

VONDOM

vera 1019

afrodita 1013

grana 1046

bacco 1034

dahlia 1035

wine 1012

foc 1052

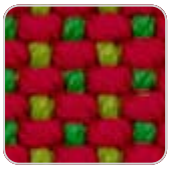
hestia 1014

turquoise 1053

niord 1015

masai 1018

ultramar 1002

aquamarina 1003

esmeralda 1016

night 1024

galan 1025

eclipse 1023

perla 1006

calipso 1017

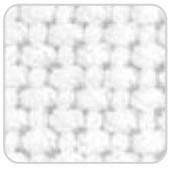
snow 1041

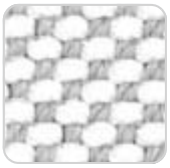
iceberg 1037

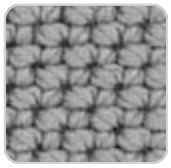
steel 1042

moon 1040

granito 1008

grey 1043

antrhacite 1044

ecru 1047

dessert 1033

taupe 1048

terra 1039

duna 1009

moka 1010

chocolate 1050

Soft and cozy fabric suitable for indoor and outdoor use.

NAUTIC

VONDOM

Ref. 54006CO

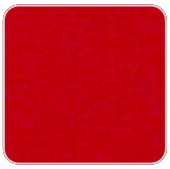
red 1108

steel 1101

orange 1113

purjai red 1106

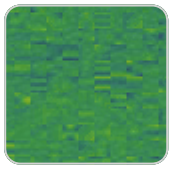
forest 1112

black 1105

natural 1111

notte blue 1114

taupe 1102

bronze 1104

white 1100

crema 1103

Soft leather like fabric suitable for indoor and outdoor use. Stantard option for upholstery.

SILVERTEX
Ref. 54006CO

forest 1224

beige 1211

bronze 1214

khaki 1218

steel 1208

taupe 1209

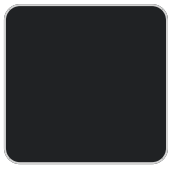
antrachite 1210

Vinyl fabric suitable for indoor and outdoor use. Special option for upholstery.

CREVIN

Ref. 54006CO

white 1308

steel 1309

taupe 1310

anthracite 1311

Upholstery fabric, that as and natural appearance and can be easy cleaned by washing machines, allowing an easy removal of mildew. Suitable for indoor and outdoor use

CICO
Ref. 54006CO

Cozy fabric with an elegant look and soft touch.

ACAPULCO
Ref. 54006CO

Cozy fabric with an elegant look and soft touch.

SIESTA
Ref. 54006CO

Cozy fabric with an elegant look and soft touch.

IKON
Ref. 54006CO

Cozy fabric with an elegant look and soft touch.
HERITAGE
Ref. 54006CO

granite 1531

Outdoor fabrics are waterproof 50% recycled acrylic, 47% acrylic and 3% PE.

SAVANE
Ref. 54006CO

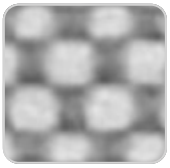
whisper 1502

white 1501

tornado 1503

Outdoor fabrics are waterproof 100% acrylic.

VONDOM
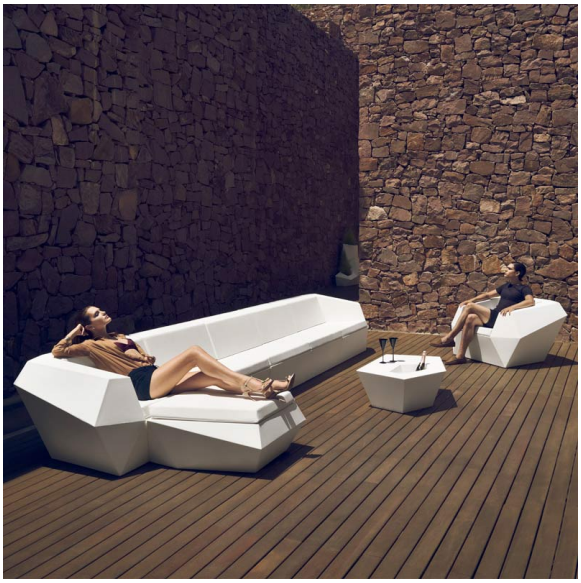
Ambients