VONDOM

Wing bar stool

by A-cero

The outdoor furniture's Wing Collection by A-cero for Vondom, was born as a result of the folding of the straight and curve lines projection mixed in a dynamic way.

VONDOM

Info

Description

Made of polyethylene resin by rotational moulding. 100% Recyclable. Item suitable for indoor and outdoor use. Available in different finishes.

Weight: 5.51 Kg

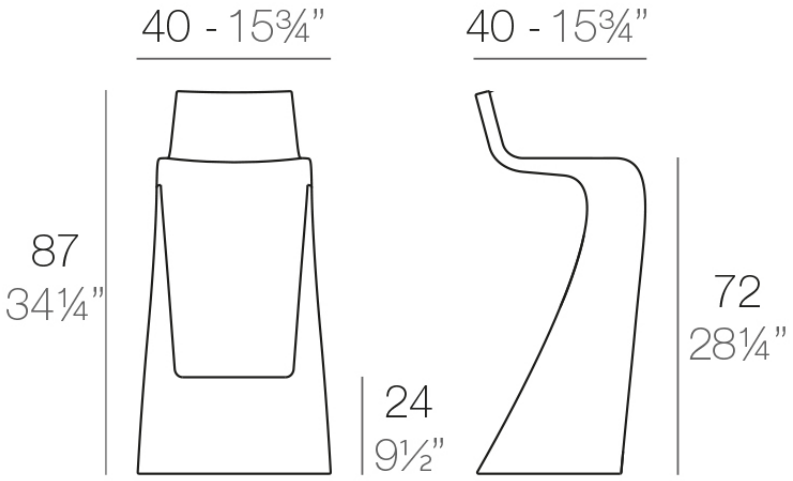

WING Taburete Alto
WING Bar Stool

VONDOM

Finishes

finishes

BASIC
Ref. 53031

Matt Polyethylene

LACQUERED
Ref. 53031F

VONDOM

purjai red | white | black | bronze | steel

anthracite | red | khaki | taupe | ecru

beige | modo green | champany

Lacquered Polyethylene

lighting

RGBW LED
Ref. 53031L

ice

Unit with internal lighting with RGBW LED technology and remote control unit for switching colors. Available only in matte ice white finish. Remote control included.

RGBW LED DMX
Ref. 53031D

ice

Unit with internal lighting with RGBW LED technology and remote control unit for switching colors. Also controlLED by DMX-1024 (wireless), enabling communication between one or more products simultaneously via the DMX transmitter (not included). There are two options to choose from: Professional XLR DMX and Home WIFI DMX. (Remote control included). Optional battery

RGBW LED BATTERY
Ref. 53031Y

ice

Unit with internal lighting with battery-powered RGBW LED technology. Includes charger and remote control for switching colors and charger. Available only in matte ice white finish.

RGBW LED DMX BATTERY
Ref. 53031DY

ice

Unit with internal lighting with RGBW LED technology and remote control unit for switching colors. Also controlLED by DMX-1024 (wireless), enabling communication between one or more products simultaneously via the DMX transmitter (not included). There are two options to choose from: Professional XLR

DMX and Home WIFI DMX. (Remote control included).

VONDOM
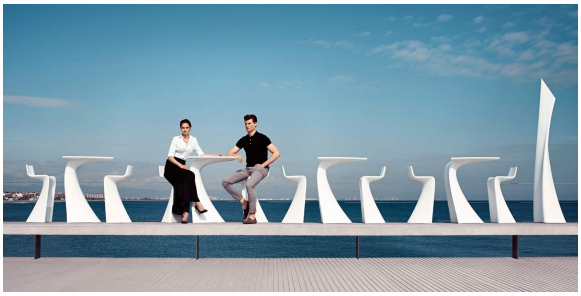
Ambients