Noma stool

by Javier Mariscal

The Noma Collection**,** designed by **Javier Mariscal** for the Spanish brand **Vondom**, is a group of outdoor items. There was an aim to create a new typology of furniture by combining the functions of a flowerpot and an outdoor table, and thus NOMA was born, a collection **characterized by its originality and versatile nature**.

VONDOM

Info

Description

Made of polyethylene resin by rotational moulding. 100% Recyclable. Item suitable for indoor and outdoor use. Available in different finishes.

Weight: 5.5 Kg

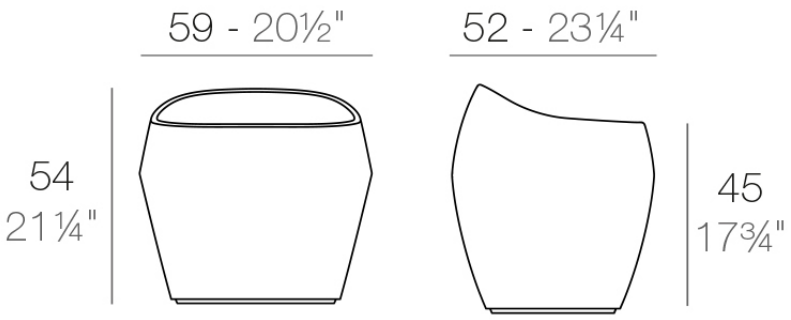

NOMA Taburete Bajo
NOMA Low Stool

VONDOM

Finishes

finishes

BASIC
Ref. 45059A

purjai red
white
black
bronze
steel
anthracite
red
khaki
taupe
ecru
beige
crema
green
orange
notte blue
ice

Matt Polyethylene

LACQUERED
Ref. 45059F

VONDOM

modo green | purjai red | white | black | bronze

steel | anthracite | champany | red | khaki

taupe | ecru | beige

Lacquered Polyethylene

lighting

WHITE LED
Ref. 45059W

ice

White internally lit unit with LED technology. Available only in matte ice white finish.

RGBW LED
Ref. 45059L

ice

Unit with internal lighting with RGBW LED technology and remote control unit for switching colors. Available only in matte ice white finish. Remote control included.

RGBW LED DMX
Ref. 45059D

ice

Unit with internal lighting with RGBW LED technology and remote control unit for switching colors. Also controlLED by DMX-1024 (wireless), enabling communication between one or more products simultaneously via the DMX transmitter (not included). There are two options to choose from: Professional XLR DMX and Home WIFI DMX. (Remote control included). Optional battery

RGBW LED BATTERY
Ref. 45059Y

ice

Unit with internal lighting with battery-powered RGBW LED technology. Includes charger and remote control for switching colors and charger. Available only in matte ice white finish.

RGBW LED DMX BATTERY
Ref. 45059DY

ice

Unit with internal lighting with RGBW LED technology and remote control unit for switching colors. Also controlLED by DMX-1024 (wireless), enabling communication between one or more products simultaneously via the DMX transmitter (not included). There are two options to choose from: Professional XLR DMX and Home WIFI DMX. (Remote control included).
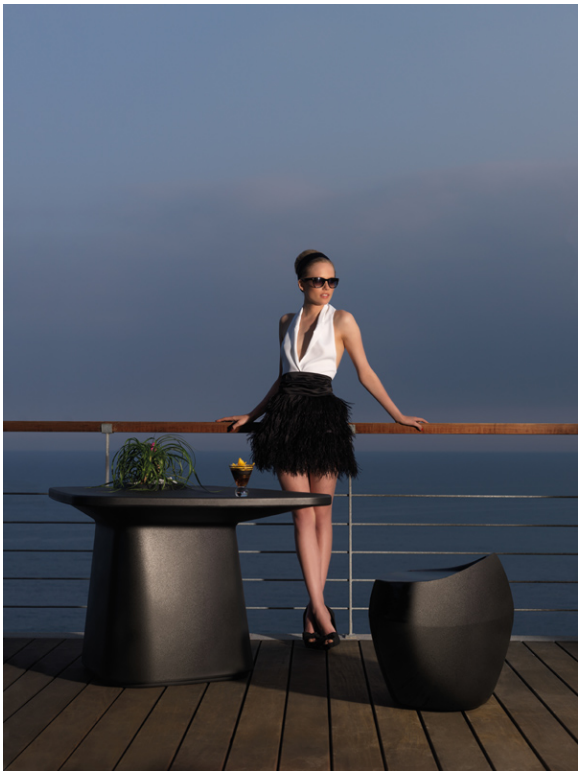
Ambients